REVISE		VER.	A
ITEM	DESCRIPTION	DATE	

FINIALY

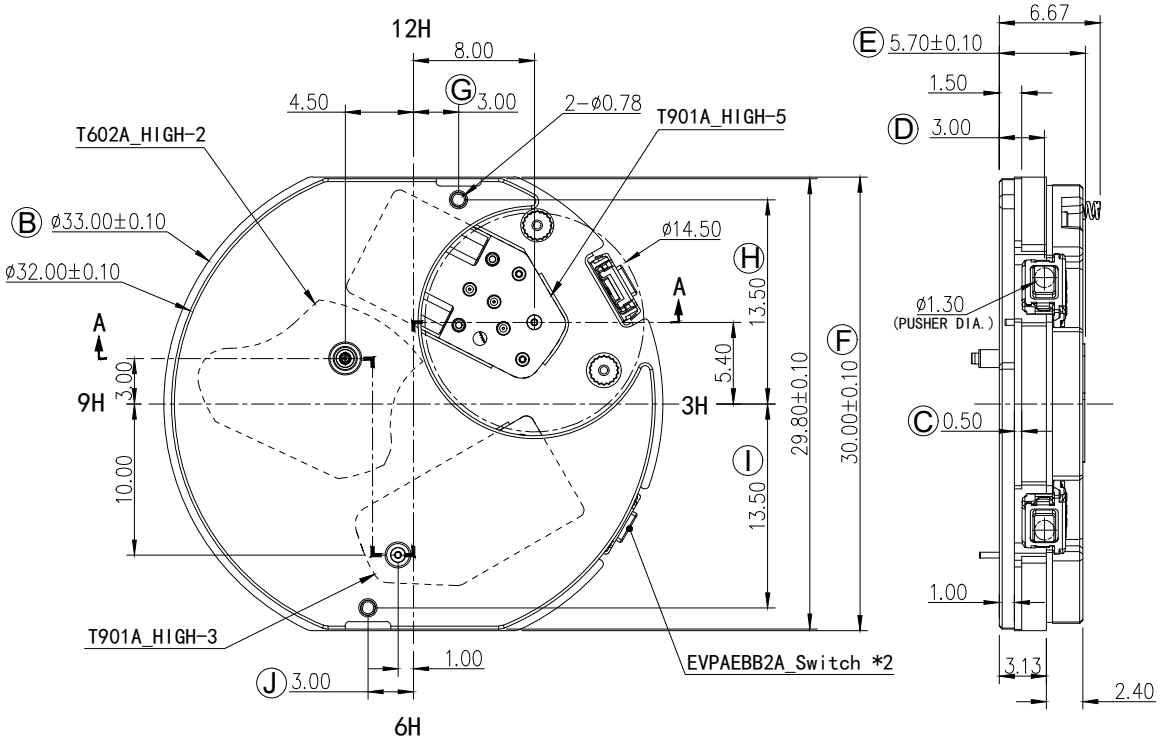

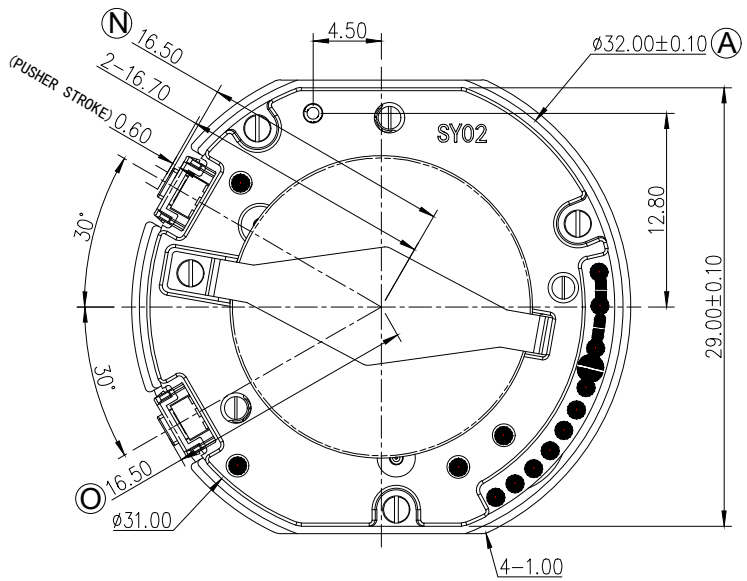

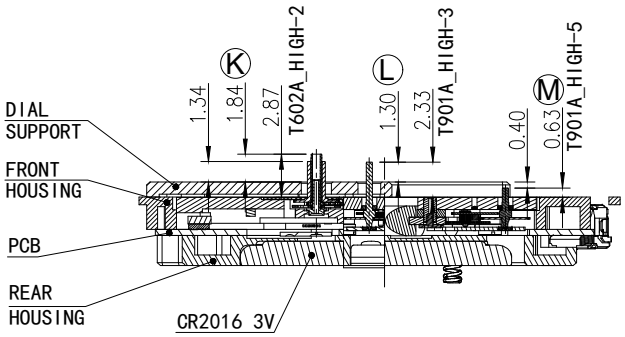

SECTION A-A

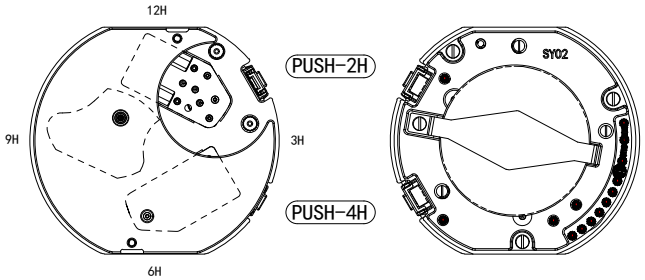

SCALE 1:1

MODULE DESCRIPTION:

1、Module size(with dowels):Ø33.0±0.10 X 30.0±0.10
2、Module size(without dowels):Ø33.0±0.10 X 30.0±0.10
3、Module thickness(with buzzer/piezo):5.70±0.10
4、Recommended case size(without dial or inner ring):Ø33.0±0.10 X 30.0±0.10 X 5.80$^{+0.05}_{-0.00}$

MODEL NO.	BJA081 (TITAN SY02)	DRAWN	CHECK	APPROVE	ANGLE
		zhaoyide	zhaoyide	Billy	
TITLE	MODULE ASSEMBLY	2024/04/01	2024/04/01	2024/04/01	
STRUCTURE	NEW	PAGE 1 OF 1		SCALE:	2 : 1
UNIT: mm TOLERANCE: ±0.10	BAO JIE ELECTRONICS (SHEN ZHEN) LIMITED 宝捷时计电子(深圳)有限公司				